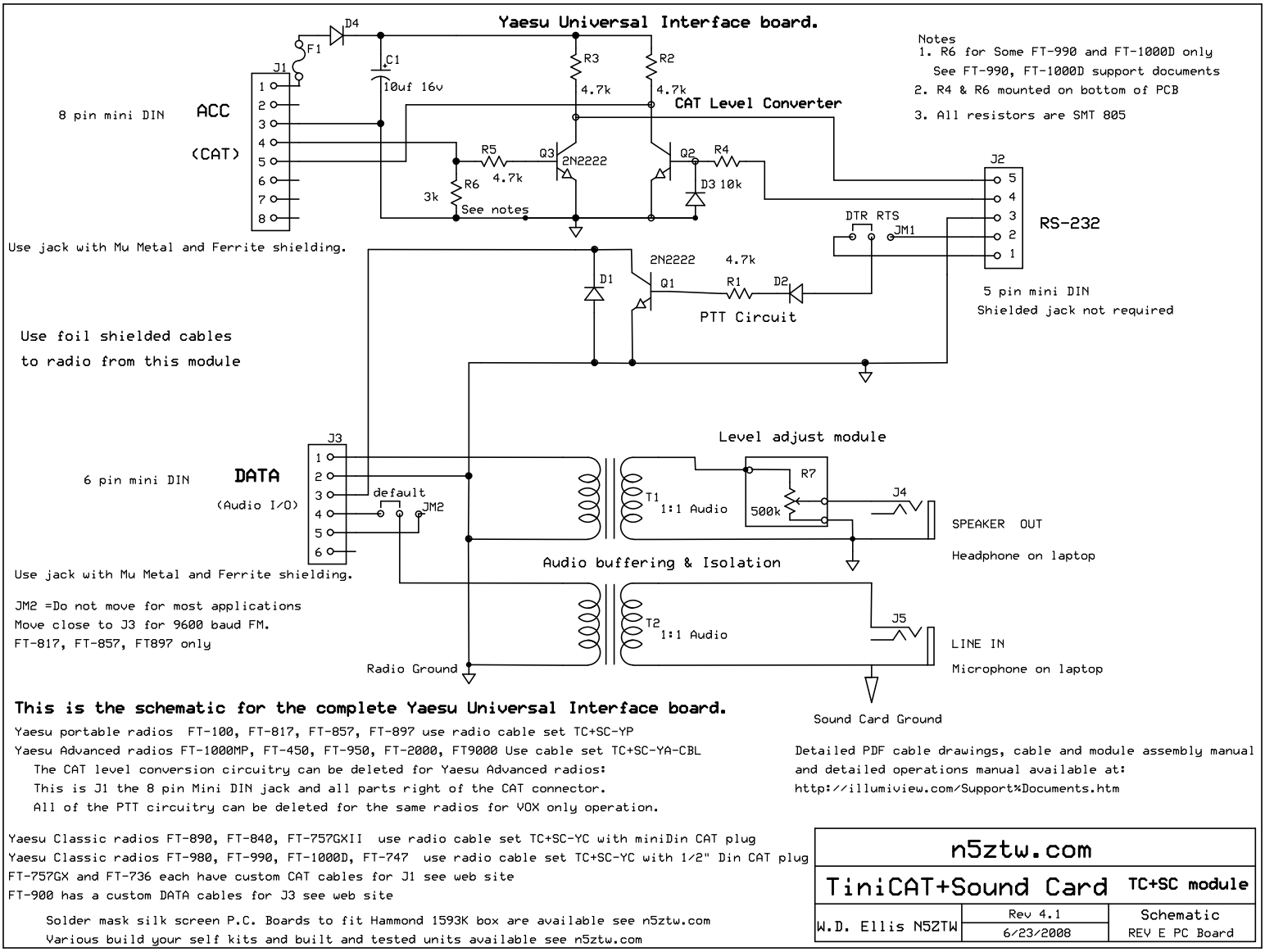

This is the schematic for the complete Yaesu Universal Interface board.

Yaesu portable radios FT-100, FT-817, FT-857, FT-897 use radio cable set TC+SC-YP
Yaesu Advanced radios FT-1000MP, FT-450, FT-950, FT-2000, FT9000 Use cable set TC+SC-YA-CBL
The CAT level conversion circuitry can be deleted for Yaesu Advanced radios:
This is J1 the 8 pin Mini DIN jack and all parts right of the CAT connector.
All of the PTT circuitry can be deleted for the same radios for VOX only operation.

Yaesu Classic radios FT-890, FT-840, FT-757GXII use radio cable set TC+SC-YC with miniDin CAT plug
Yaesu Classic radios FT-980, FT-990, FT-1000D, FT-747 use radio cable set TC+SC-YC with 1/2" Din CAT plug
FT-757GX and FT-736 each have custom CAT cables for J1 see web site
FT-900 has a custom DATA cables for J3 see web site

Solder mask silk screen P.C. Boards to fit Hammond 1593K box are available see n5ztw.com
Various build your self kits and built and tested units available see n5ztw.com

Detailed PDF cable drawings, cable and module assembly manual
and detailed operations manual available at:
http://illumiview.com/Support%Documents.htm

n5ztw.com		
TiniCAT+Sound Card		TC+SC module
W.D. Ellis N5ZTW	Rev 4.1 6/23/2008	Schematic REV E PC Board